Designer Select
Southwest

EAGLE® ROOFING PRODUCTS

Capistrano Boosted
39706 Grand Canyon

USA Owned. USA Made.

The color represented in this inspirational photo may not be available in your area. Similar palettes, available in your region, may be suggested as an alternative by your local Eagle Account Representative.

SIMPLE. *elegant*. SOLUTIONS.

from a company you can trust

Eagle is Curb Appeal and Infinite Choices

- Choose from an extensive collection of profiles, textures and dimensions
- Vast color offering in standard integral, ranges and multi-color blends
- Flat tiles offer a crisp, clean appearance for Modern, Colonial, Craftsman, French Provincial and Tudor architecture
- High profile Barrel tiles are beautiful and timeless, ideal for Mediterranean architecture
- Medium profile tiles complement Modern architectural designs, in addition to large commercial or residential buildings
- Concrete tile is the ideal alternative to slate, wood, stone coated metal, and asphalt roofing materials
- Tile roofs enhance curb appeal and maintain the value of the structure over time

Eagle is Peace of Mind

- USA Owned. USA Made.
- Best warranty in the industry
- Our tile is tested to the highest standards in the industry for fire, high-wind and freeze-thaw protection*
- Our customer service, sales and technical departments are here for you before, during and after the sale
- Our products are affordable and environmentally friendly

*Excludes color bonded/slurry tiles.

Ponderosa
SHP 8706 Cascade Blend

Flat Profiles

Limitless options without compromise, Eagle's Flat Tile profiles offer graceful beauty, rugged strength and enhanced curb appeal. Available in a vast array of colors from warm earth tones and cool grays to refreshing natural hues ranging from green to eggplant—its crisp appearance complements both traditional and modern architecture. Depending on the look you are after, our Flat Tiles can emulate the texture and style of natural materials such as wood shake, clay and slate – and are a more affordable alternative.

See for yourself. Concrete roof tile never looked so good.

Estate, Staggered
SHE 8704 Lehigh Blend

Bel Air & Estate

PER 100 SQ FT | **88.5** Tiles (3" headlap) | **970** Pounds (approx.)

Sometimes, the beauty is in the simplicity of the design. The Bel Air profile is a flat, smooth tile that offers clean lines and versatility to use on a variety of different architectural styles. If you are looking to add a little more dimension to your roof, then the Estate profile is the ideal choice. Fine coarse lines and a more defined edge provides texture and nuanced beauty to your outdoor space, perfectly complementing any architectural style – both residential and commercial.

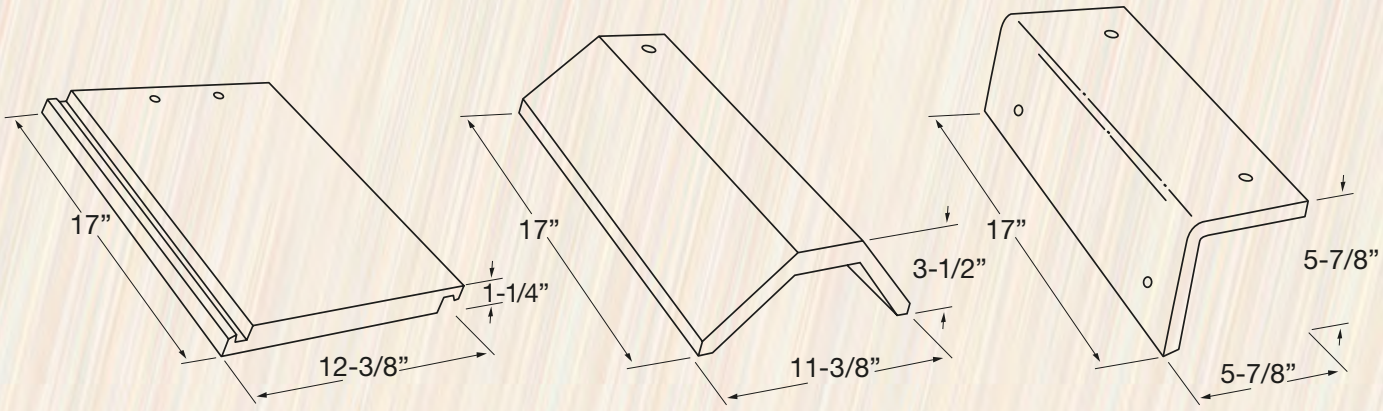

4598 Ocotillo - *Hues of Peachy Tan, Charcoal, Cream Streaks*
T24 Ref: .25 Emi: .80 SRI: 21 A.SRI: 27 CRRC: 0918-0001

SCB 8828 Bridgeport Blend - *Blend of Grays, Taupe, Brown, Black Streaks*

Estate »

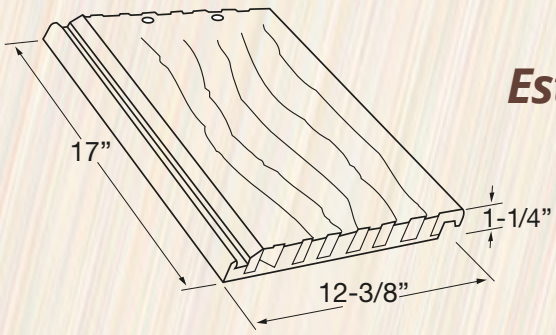

SHE 8704 Lehigh Blend - *Blend of Natural Gray, Light Gray, Charcoal*
T24 Ref: .15 Emi: .94 SRI: 15 A.SRI: 16 CRRC: 0918-0046

A.SRI actual: #. A.SRI calculated: #. Yellow highlighted calculation indicates an A.SRI of 16 or greater. *Color bonded/slurry tiles not recommended in locales subject to repeated freeze-thaw cycles.
Notice: To ensure your satisfaction with your tile choice, we request you obtain a current tile sample; or request addresses in your area from your local Design Center/Eagle Representative.

Ponderosa
SHP 8707 Sierra Blend

Ponderosa

PER 100 SQ FT | **88.5** Tiles (3" headlap) | **970** Pounds (approx.)

A more durable and affordable alternative to natural wood shake, our Ponderosa tile has beautifully textured shadow lines that graze its surface to deliver a truly rustic wood appearance. If you are seeking remarkable curb appeal, a Ponderosa roof will complement many architectural styles including Prairie, Craftsman and Bungalow, to name a few.

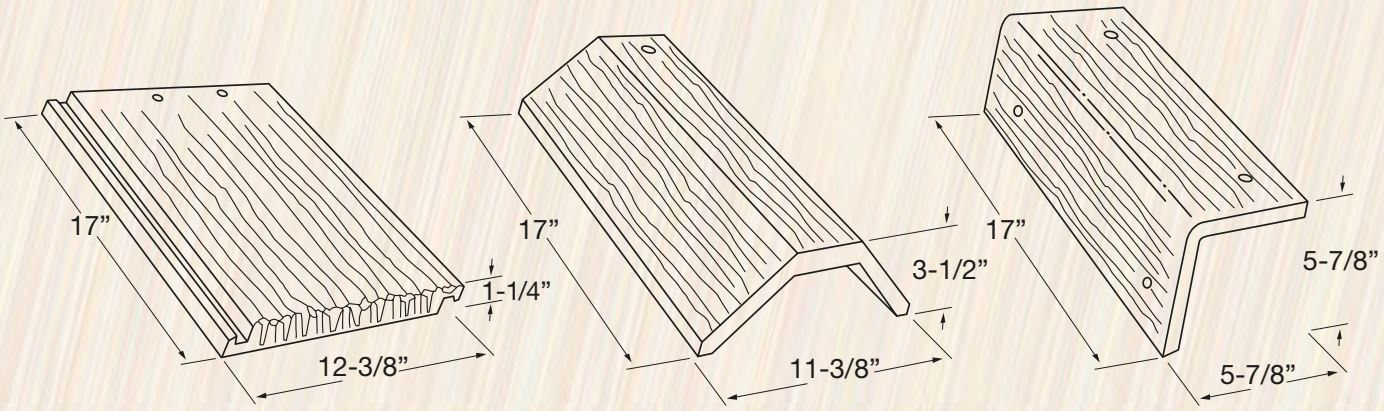

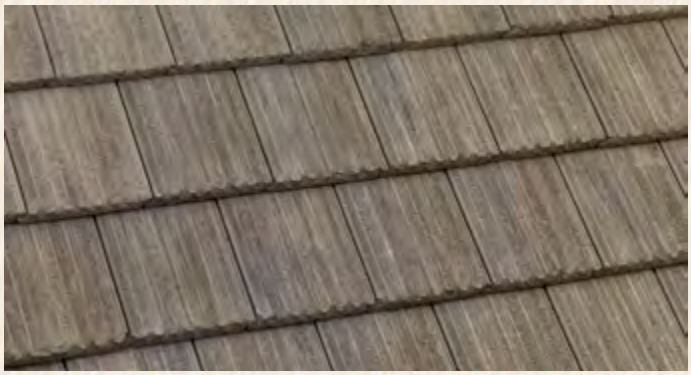

5552 Canyon Gray - *Hues of Fawn Gray, Purple, Gray Streaks*
T24 Ref: .13 Emi: .90 SRI: 10 A.SRI: 14 CRRC: 0918-0073

SHP 8706 Cascade Blend - *Blend of Tan, Dark Brown*
T24 Ref: .14 Emi: .90 SRI: 11 A.SRI: 15 CRRC: 0918-0064

SHP 8707 Sierra Blend - *Blend of Tan, Dark Brown, Reddish Brown*
T24 Ref: .14 Emi: .90 SRI: 11 A.SRI: 15 CRRC: 0918-0070

A.SRI actual: #. A.SRI calculated: #. Yellow highlighted calculation indicates an A.SRI of 16 or greater. *Color bonded/slurry tiles not recommended in locales subject to repeated freeze-thaw cycles.
Notice: To ensure your satisfaction with your tile choice, we request you obtain a current tile sample; or request addresses in your area from your local Design Center/Eagle Representative.

This is an inspirational slate photo. Eagle's products in the next few pages will emulate the luxurious nature of slate at a more affordable price.

Slate Inspiration

Around for centuries, slate is a beautiful roofing material that has been used on some of the world's greatest buildings. However, the weight and expense of slate has made it an unattainable commodity for many—until now. Eagle Roofing Products has created a distinguished, gorgeous collection that has been inspired by the oldest roofing product on earth. Emulating the look, feel and longevity of natural slate, our Tapered Slate and Textured Slate lines provide contrast and character to your residential or commercial roof in ways that appear subtle, yet distinctive.

Quality craftsmanship and architectural prestige, at a fraction of the cost of real or synthetic slate; that's what you can expect from our Slate Inspired collection.

Textured Slate
49105 Windermere Blend

NEW

49103 Amesbury Blend - *Blend of Medium Gray, Dark Gray, Maroon*

NEW

49101 Chatham Blend - *Blend of Tan, Brown*

A.SRI actual: #. A.SRI calculated: #. Yellow highlighted calculation indicates an A.SRI of 16 or greater. *Color bonded/slurry tiles not recommended in locales subject to repeated freeze-thaw cycles.
Notice: To ensure your satisfaction with your tile choice, we request you obtain a current tile sample; or request addresses in your area from your local Design Center/Eagle Representative.

Textured Slate

PER 100 SQ FT | **88.5** Tiles (3" headlap) | **970** Pounds (approx.)

Textured Slate tile embodies an exquisite texture, beveled sides and a beautiful edge treatment that adds artful elegance to both modern and classic design styles. Rich colors and its alluring style makes Textured Slate a stunning enhancement to your residential or commercial project.

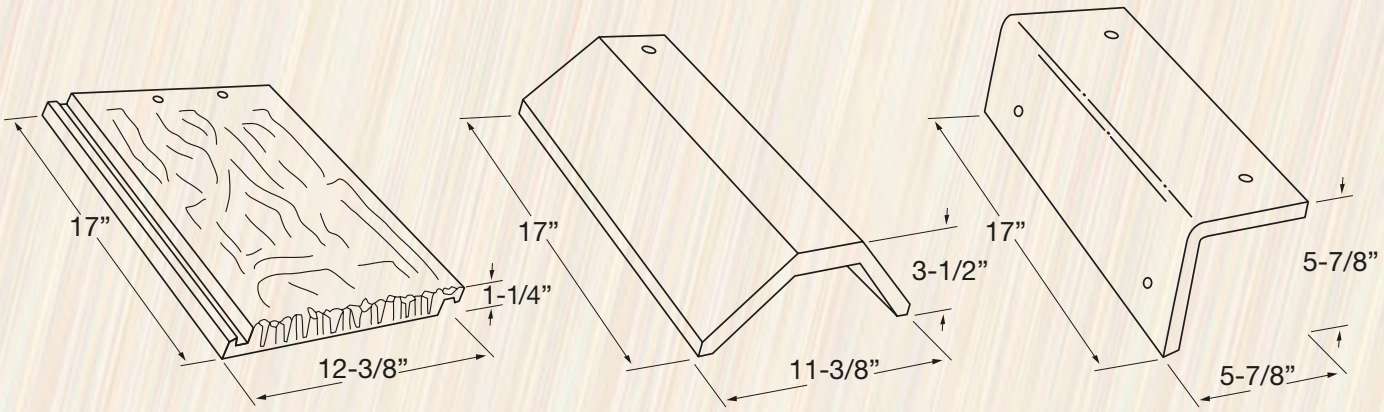

NEW

49102 Heathrow Blend - *Blend of Greens*

NEW

49104 Providence Blend - *Blend of Light Gray, Medium Gray, Maroon*

NEW

49106 Plymouth Blend - *Blend of Grays*

NEW

49105 Windermere Blend - *Blend of Dark Brown, Charcoal*

A.SRI actual: #. A.SRI calculated: #. Yellow highlighted calculation indicates an A.SRI of 16 or greater. *Color bonded/slurry tiles not recommended in locales subject to repeated freeze-thaw cycles.
Notice: To ensure your satisfaction with your tile choice, we request you obtain a current tile sample; or request addresses in your area from your local Design Center/Eagle Representative.

Estate Staggered
SHE 8704 Lehigh Blend

Staggered Installation

Installing flat tile with a staggered exposure is an easy way to give a home an "Old World" look. While staggered exposure tiles are a natural fit for architectural styles like English Cottage and French Country, this unique look can breathe new life into homes of many varied styles.

It is vitally important that the professional roofing contractor plans the entire roof layout prior to installing tiles, taking into consideration the weight and waste. Approximately half of the tiles on a staggered roof will have a shorter exposure than the other half. It will be essential to calculate the additional tiles required to create a unique staggered exposure roof prior to ordering product. Whether installing a staggered exposure tile roof with battens or without, it is imperative to make proper measurements when preparing the roof for installation. The first course at the eave will be installed normally with a standard exposure. The staggered exposure begins at the second course.

If battens are utilized, the staggered exposure is achieved by installing partial battens (no greater than 12" in length) immediately above the primary course battens beginning on the second course (as seen in upper inset illustration). The tiles with the shorter exposure will hang on the higher partial batten (see image). If a direct-to-deck application is utilized (no battens), a second set of chalk lines will be marked at each course, one line for the normal exposure and one for the staggered exposure tiles. This is based on a 1" stagger.

One more consideration is the water channel at the left side of the tile. The bottom of the water channel will be visible. Leaving this portion of the water channel exposed can detract from the desired look of the staggered roof, especially on steeper roof pitches where a majority of the face of each tile will be visible. If desired, exposed channel can be removed using a saw and/or tile nippers (as seen in lower inset illustration).

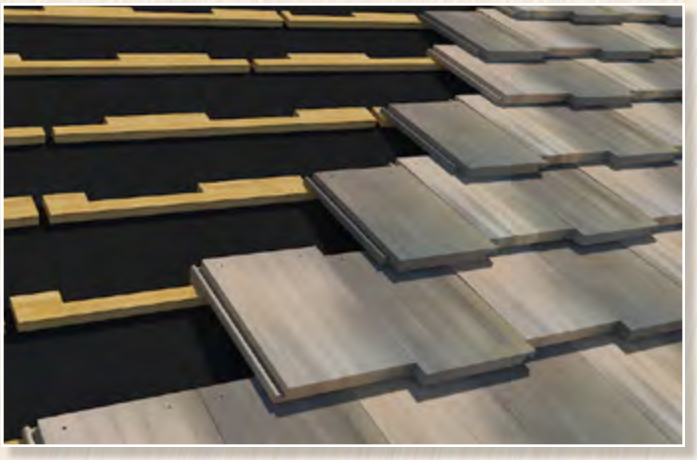

In the end, you can rest assured that flat tile with a staggered exposure will create an overall beautiful, unique look to your project.

Please note that although aesthetically stunning, staggered installations are extremely complicated and may cause layout and waterproofing complications. Your Roofing Contractor is ultimately responsible for the planning and proper installation of the tile.

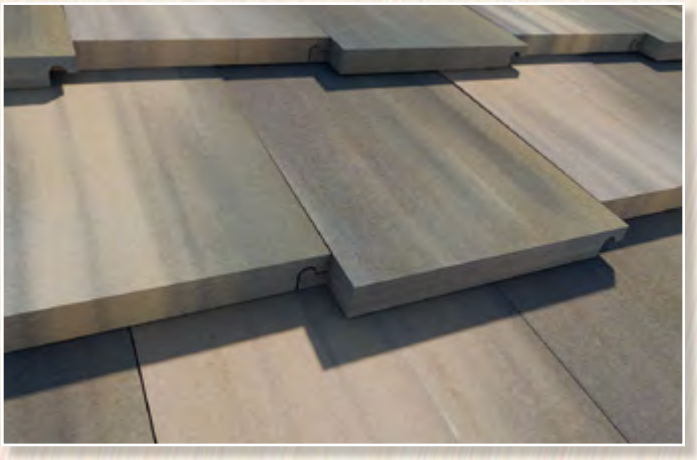

Capistrano
SHC 8709 El Morado Blend

S-Profiles

Inspiration that will move you... *Eagle's high and medium barrel shaped profiles exude rich colors, unmatched aesthetics and timeless elegance. Whether you are looking to emulate the authentic look of Spanish tile in the Old World or wish for a more contemporary style while mirroring the Mediterranean appearance found in the roofscapes of Italy, France and Greece; you can rest assured that your curb appeal will be the envy of everyone in your neighborhood.*

Capistrano
39709 Glenn Canyon

Capistrano

PER 100 SQ FT | **88.5** Tiles (3" headlap) | **900** Pounds (approx.)

A high S-profile tile, our Capistrano is semi-cylindrical and is the most traditionally recognized of all tile profiles. While you may think a Capistrano tile roof is suitable for only Spanish or Italian architecture, it actually offers stunning good looks that work well with any style, as it pairs nicely with stucco, stone or brick siding. It is used widely on residential, commercial, military and institutional buildings throughout the United States.

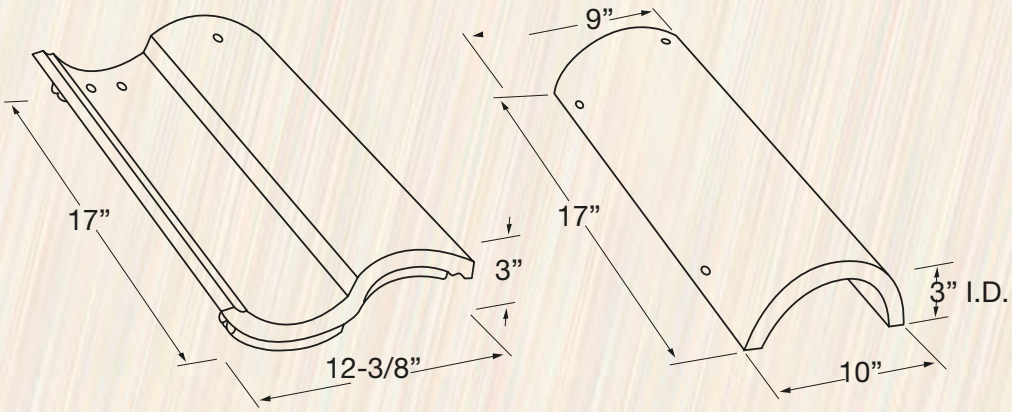

3598 Ocotilla - *Hues of Peachy Tan, Charcoal, Cream Streaks*
T24 Ref: .25 Emi: .80 SRI: 21 A.SRI: 27 CRRC: 0918-0001

39706 Grand Canyon - *Hues of Terracotta, Cream, Brown Streaks*
T24 Ref: .32 Emi: .87 SRI: 33 A.SRI: 30 CRRC: 0918-0077 LEED†

39707 Sabino Canyon - *Hues of Purple, Cream, Dark Brown Streaks*
T24 Ref: .19 Emi: .89 SRI: 17 A.SRI: 21 CRRC: 0918-0082

39709 Glenn Canyon - *Hues of Dark Brown, Cream, Black Streaks*

A.SRI actual: #. A.SRI calculated: #. Yellow highlighted calculation indicates an A.SRI of 16 or greater. *Color bonded/slurry tiles not recommended in locales subject to repeated freeze-thaw cycles.
Notice: To ensure your satisfaction with your tile choice, we request you obtain a current tile sample; or request addresses in your area from your local Design Center/Eagle Representative.

Capistrano

NEW

39724 Sunset Valley - *Hues of Tan, Cream, Orange*

SCC 8829 Santa Fe Blend - *Blend of Orange, Maroon, Dark Brown, Terracotta*

SCC 8831 Winslow Blend - *Blend of Orange, Terracotta, Beige Brown*

SHC 8708 Del Oro Blend - *Blend of Terracotta, Gold, Tan, Brown*

T24 Ref: .14 Emi: .90 SRI: 11 A.SRI: 16 CRRC: 0918-0075

SHC 8709 El Morado Blend - *Blend of Terracotta, Burgundy*

T24 Ref: .17 Emi: .88 SRI: 14 A.SRI: 17 CRRC: 0918-0076

SHC 8719 Carmel Blend - *Blend of Gold, Brown, Red, Maroon Gray*

SMC 8401 San Miguel Blend - *Blend of Dark Chocolate Brown, Taupe, Rosy Brown*

SMC 8402 Santa Cruz Blend - *Blend of Tan, Reddish Brown, Brown*

T24 Ref: .14 Emi: .89 SRI: 11 A.SRI: 16 CRRC: 0918-0058

A.SRI actual: #. A.SRI calculated: #. Yellow highlighted calculation indicates an A.SRI of 16 or greater. *Color bonded/slurry tiles not recommended in locales subject to repeated freeze-thaw cycles.
Notice: To ensure your satisfaction with your tile choice, we request you obtain a current tile sample; or request addresses in your area from your local Design Center/Eagle Representative.

SMC 8403 Santa Barbara Blend - *Blend of Light, Dark Terracotta, Mauve, Dark Beige*
T24 Ref: .16 Emi: .89 SRI: 13 A.SRI: 18 CRRC: 0918-0056

SMC 8822 San Buenaventura - *Hues of Clay Red*
T24 Ref: .24 Emi: .87 SRI: 23 A.SRI: 24 CRRC: 0918-0067

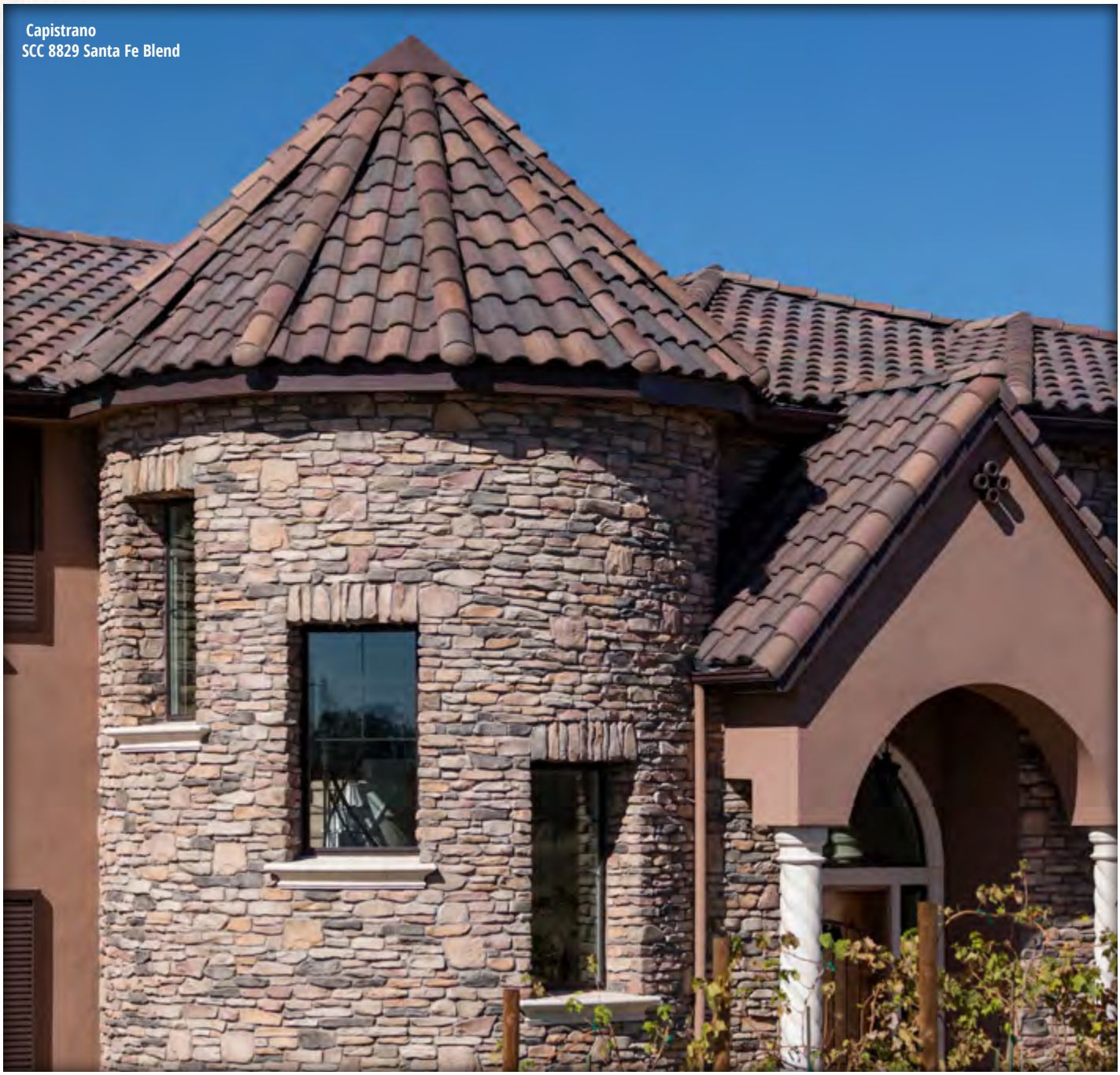

A.SRI actual: #. A.SRI calculated: #. Yellow highlighted calculation indicates an A.SRI of 16 or greater. *Color bonded/slurry tiles not recommended in locales subject to repeated freeze-thaw cycles.
Notice: To ensure your satisfaction with your tile choice, we request you obtain a current tile sample; or request addresses in your area from your local Design Center/Eagle Representative.

Boosted Malibu
29706 Grand Canyon

Malibu

PER 100 SQ FT | **88** Tiles (3" headlap) **903** Pounds (approx.)

Malibu tile has gentle curves, which adds visual interest and striking effects, easily complementing modern architectural designs and large buildings. It's particularly effective on distinctive homes, apartments, hotels, places of worship and commercial structures. It's the best of both worlds, where Mediterranean meets Contemporary.

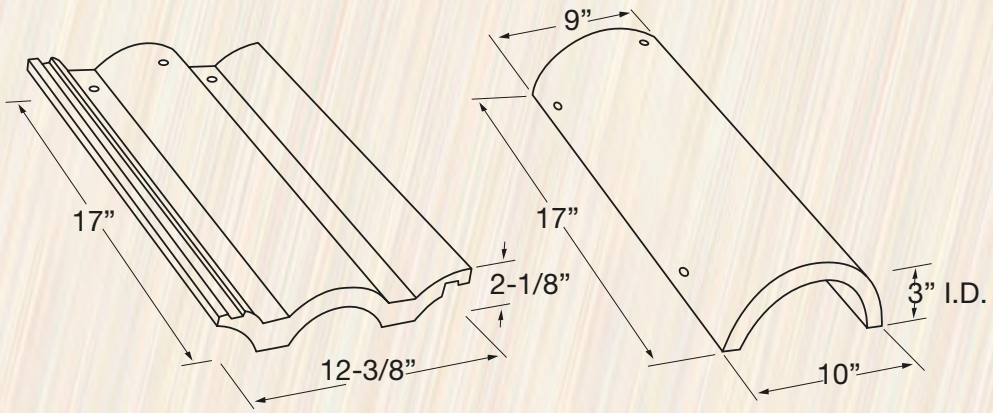

29706 Grand Canyon - *Hues of Terracotta, Cream, Brown Streaks*
T24 Ref: .32 Emi: .87 SRI: 33 A.SRI: 30 CRRC: 0918-0077 LEED†

29707 Sabino Canyon - *Hues of Purple, Cream, Dark Brown Streaks*
T24 Ref: .19 Emi: .89 SRI: 17 A.SRI: 21 CRRC: 0918-0082

29708 Cimarron Canyon - *Hues of Tan, Cream, Dark Brown Streaks*

A.SRI actual: #. A.SRI calculated: #. Yellow highlighted calculation indicates an A.SRI of 16 or greater. *Color bonded/slurry tiles not recommended in locales subject to repeated freeze-thaw cycles.
Notice: To ensure your satisfaction with your tile choice, we request you obtain a current tile sample; or request addresses in your area from your local Design Center/Eagle Representative.

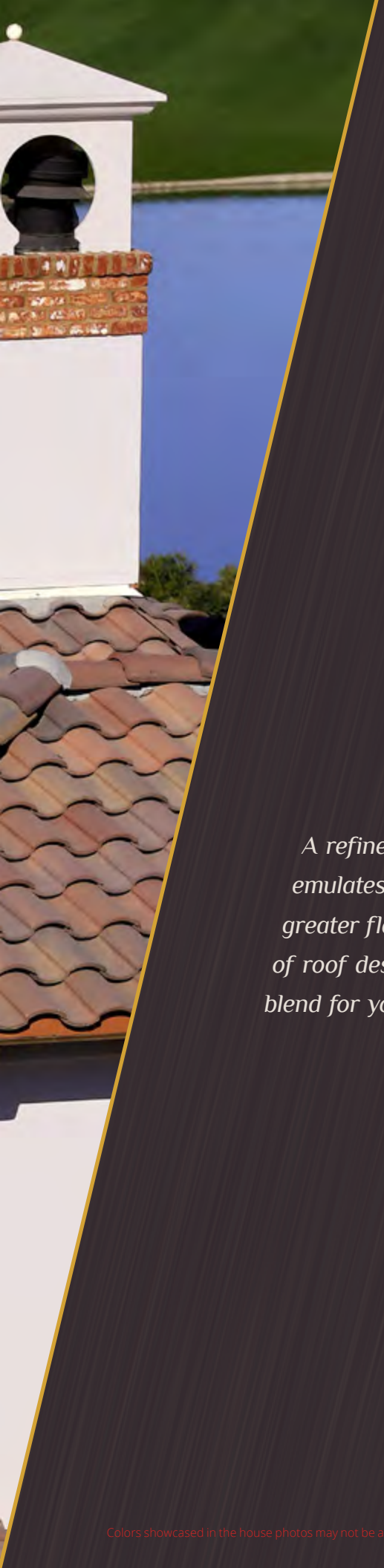

Signature
Blends of Blends

Lush Blends + Personal Style = Stunning Color Combinations

A refined twist to playing with color, our Signature Blends of Blends line emulates the classic look of real clay tiles with natural blends that allow greater flexibility in creating the most traditional to the most contemporary of roof designs. Use our virtually limitless color palette to create a distinct blend for your residential or commercial project. ***A handcrafted work of art, we encourage you to go ahead and explore the possibilities.***

Colors showcased in the house photos may not be available in your area. Similar palettes may be available and suggested as an alternative by your local Eagle Account Representative.

Inspiration That Commands Attention

Oakey browns, warm coppers, rusty golds, charcoal hues, plum undertones...
This is just a snippet of the color options you have at your disposal to create your own custom Signature Blends of Blends. Your sense of style will shine through with captivating color blends that will make your roof and your home uniquely yours.

Achieving the Signature Blends of Blends Appearance

The blends featured are a small sampling of the vast color possibilities available. Note some colors may not be available in your area. To create your own Signature Blends of Blends look, we encourage you to contact your local Eagle Account Representative who can assist you in this process. Signature Blends of Blends do not come pre-packaged or blended in the pallet and are to be purchased individually. Eagle Roofing Products recommends that you discuss the design effect and percentage of each color with your Roofer, prior to installation, to ensure that you achieve the desired look and that no hot spots (patches of color that undo the blended effect) are created. Your Roofing Contractor is responsible for blending the colors during the loading of and installation of the tiles in order to create the Signature Blends of Blends design, ensuring that the placement of the tile is completed in an aesthetically pleasing manner.

SHC 8708 Del Oro Blend
SMC 8401 San Miguel Blend

SHC 8708 Del Oro Blend - *Blend of Terracotta, Gold, Tan, Brown*

SMC 8401 San Miguel Blend - *Blend of Dark Chocolate Brown, Taupe, Rosy Brown*

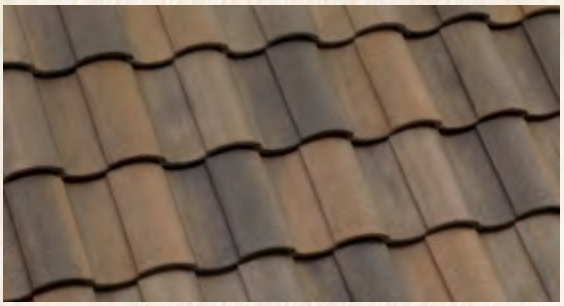

Notice: To ensure your satisfaction with your tile choice, we request you obtain a current tile sample; or request addresses in your area from your local Design Center/Eagle Representative. Colors showcased in the house photos may not be available in your area. Similar palettes may be available and suggested as an alternative by your local Eagle Account Representative.

SHC 8719 Carmel Blend - *Blend of Gold, Brown, Red, Maroon Gray*

SMC 8401 San Miguel Blend - *Blend of Dark Chocolate Brown, Taupe, Rosy Brown*

SHC 8719 Carmel Blend
SMC 8401 San Miguel Blend

SHC 8719 Carmel Blend
SMC 8402 Santa Cruz Blend

SHC 8719 Carmel Blend - *Blend of Gold, Brown, Red, Maroon Gray*

SMC 8402 Santa Cruz Blend - *Blend of Tan, Reddish Brown, Brown*

Notice: To ensure your satisfaction with your tile choice, we request you obtain a current tile sample; or request addresses in your area from your local Design Center/Eagle Representative. Colors showcased in the house photos may not be available in your area. Similar palettes may be available and suggested as an alternative by your local Eagle Account Representative.

Signature Blends of Blends

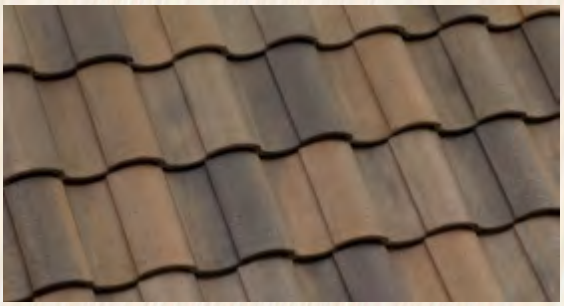

SMC 8401 San Miguel Blend - *Blend of Dark Chocolate Brown, Taupe, Rosy Brown*

3549 Santa Paula - *Hues of Tan, Cream, Brown Streaks*

SMC 8401 San Miguel Blend
3549 Santa Paula

SHC 8719 Carmel Blend
3723 Adobe Blend

SHC 8719 Carmel Blend - *Blend of Gold, Brown, Red, Maroon Gray*

3723 Adobe Blend - *Blends of Maroon, Terracotta, Gray, Gold*

Notice: To ensure your satisfaction with your tile choice, we request you obtain a current tile sample; or request addresses in your area from your local Design Center/Eagle Representative. Colors showcased in the house photos may not be available in your area. Similar palettes may be available and suggested as an alternative by your local Eagle Account Representative.

SMC 8402 Santa Cruz Blend - *Blend of Tan, Reddish Brown, Brown*

SHC 8709 El Morado Blend - *Blend of Terracotta, Burgundy*

SMC 8402 Santa Cruz Blend
SHC 8709 El Morado Blend

Notice: To ensure your satisfaction with your tile choice, we request you obtain a current tile sample; or request addresses in your area from your local Design Center/Eagle Representative. Colors showcased in the house photos may not be available in your area. Similar palettes may be available and suggested as an alternative by your local Eagle Account Representative.

Capistrano—Boosted
3645 Sunrise Blend

Boosted Capistrano Accessories

Seeking the genuine look of old Spanish tile without the premium cost of a clay roof? Realize your vision with Eagle's Boosted Capistrano. Your home will dazzle with rustic touches of Old World charm that bring the genuine look of natural clay to life. All this with the peace of mind that your concrete tile roof is designed to last the life of your structure, ***while adding undeniable character to your exterior space.***

Boosted Capistrano Accessories

It's easy to create the beauty of an authentic mortar-boosted clay roof with our Boosted Capistrano accessory pieces. Available in a wide range of colors, these pieces were designed to complement your Capistrano tile. For best results, mix your Boosted color and base color as this will add to the authenticity of your roof.

Considerations:

- Choose a Boosted accessory piece to go with your base tile. For color options, please contact an Eagle Account Representative.
- Decide on the look that you want. Prefer a neater treatment? Want a more authentic look?
- Decide how much boost you would like.

No matter what type of Boosted application you choose, your new Eagle Boosted Capistrano roof will be sure to impress.

% used on roof	Approx. installed weight field tile per 100 sq ft
10% Application	990
20% Application	1080
30% Application	1170

Each Boosted piece weighs approximately 4.8 lbs.

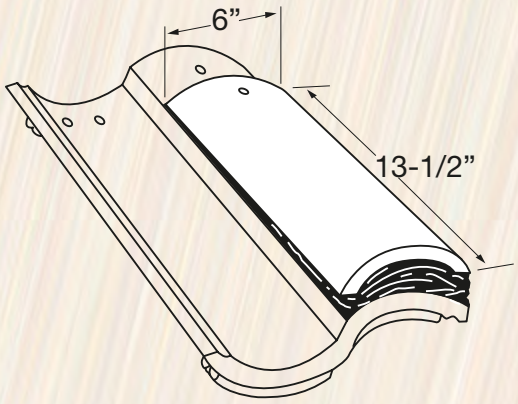

Close-Up of Boosted Eave

approx. 10% Overall Boost | approx. 990 lbs per square

approx. 20% Overall Boost | approx. 1080 lbs per square

approx. 30% Overall Boost | approx. 1170 lbs per square

The color represented in this inspirational photo may not be available in your area. Similar palettes, available in your region, may be suggested as an alternative by your local Eagle Account Representative.

Why
Eagle Roofing Products *and Concrete Roof Tile*

Eagle Roofing Products is the largest, USA owned concrete roof tile manufacturer in the United States. For over 25 years, we have excelled in providing our customers with durable, energy efficient and environmentally friendly concrete roof tiles that are beautiful and timeless.

Eagle Roofing Products

Whether you are building a new home or re-roofing your existing one, your home deserves the best roof possible. When you choose Eagle concrete tile, you'll get a roof that is aesthetically stunning, durable and sustainable.

Founded over 25 years ago by Robert Burlingame, Eagle began operations in the fall of 1989 with one high-pressure concrete tile extrusion machine. Today, Eagle's Rialto, California facility is the largest in North America. In addition to Rialto, we operate facilities in Phoenix, Arizona as well as Stockton, California and Sumterville, Florida meeting the demand for concrete roof tile across the United States and Canada.

Our expertise, coupled with our extensive array of profiles and colors, enables us to provide our customers with high quality concrete roofing products that are beautiful, long-lasting and environmentally friendly.

Eagle's long experience in the roof tile industry and dedication to prompt personal response to its customers' needs have resulted in a well-deserved reputation for quality and service—a reputation that is unmatched.

Eagle is customer service.

Unsurpassed Beauty, Strength and Longevity

When you choose a concrete tile roof from Eagle Roofing Products, you are choosing years of protection and peace of mind. Our tile is tested to the highest standards of the industry. A properly installed Eagle Tile Roof will withstand the elements through rain, snow, high wind and scorching heat – outperforming all other roofing products, while remaining aesthetically stunning.

Fire Tested – Eagle Roof Tile is a Class A roof covering that will protect your home and personal property.

High Wind Tested – Installed correctly, Eagle Roof Tile can survive the strongest storms and harshest weather. Eagle tile is tested and approved for use in the Miami Dade high velocity hurricane zone, withstanding sustained winds of up to 180mph.

Hail/Impact Tested* – Eagle Roof Tile manufactured at our Pheonix, Arizona facility has a Class 3 Impact Resistance rating for all Capistrano, Malibu and Flat tiles, as described in FM 4473. Some insurance companies offer discounted premiums for houses with tile roofs because of its impact resistance.

***Freeze Thaw Protection –** Eagle Roof Tile passes Freeze-Thaw requirements. **Excludes color bonded/slurry tiles.*

*Roofing material lifespan over 75 years.**

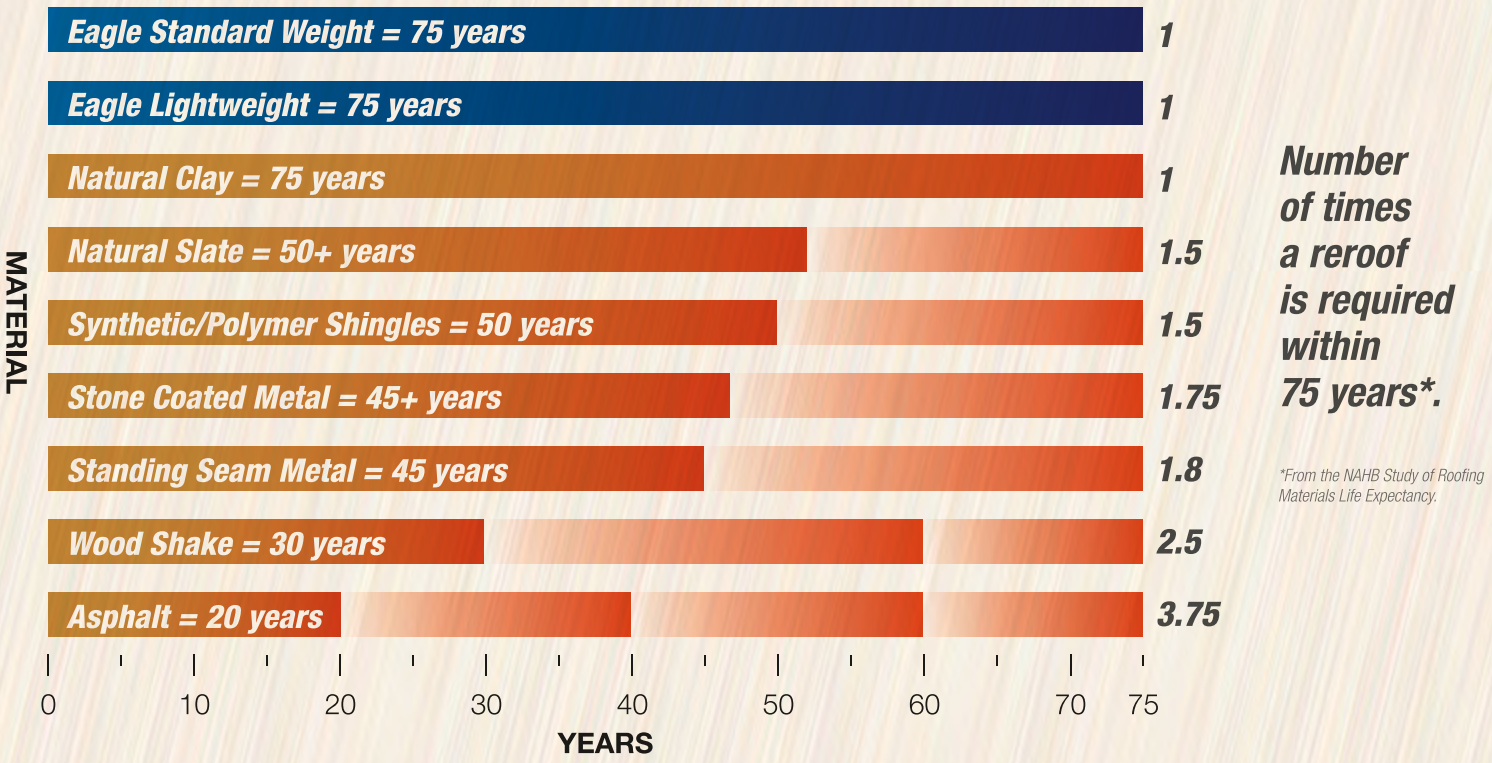

*From the NAHB Study of Roofing Materials Life Expectancy.

Tile Roofing Is Simply The Superior Choice

New Construction · Reroof · Residential · Commercial

***Tile**. Sustainable, aesthetically superior protection.*

***Asphalt Shingle.** Temporary, basic roof covering.*

HOW DOES TILE COMPARE TO ASPHALT SHINGLES?

- Real tile roofs are no longer only “round and red”. Tile roofs are available in a variety of profiles and colors.
- Tile roofs are produced from ALL natural products - concrete or clay.
  - Tile roofs are not plastic, resin, rubber or metal.
  - Tile roofs do not warp, rust or bend.
- Tile roofs are heavier than asphalt shingles. Weight equates to longevity, thermal superiority, weather, impact resistance and much more.
- Tile roofs invite extreme weather conditions, while asphalt shingle manufacturers base their sales projections on how many of their roofs will need replacing every year.
  - Tile can withstand sustained winds of up to 180mph*
  - Class A Roof Covering
  - Freeze-Thaw (Excludes color bonded/slurry tiles)
- Asphalt shingles are not distinctive.
- Asphalt shingles are not environmentally friendly, as they are a petroleum based product and fill landfills.
- Asphalt shingles do not perform well in hail storms. Roofers swarm neighborhoods subjected to the slightest hail storm.
- Synthetics and plastic products lack a proven track record as a long-lasting and durable roofing product.
- Asphalt shingles are easily damaged by high winds, especially after they age, dry out, lose granules and crack.
- Shingles are not resistant to extreme temperature variations, lending to cracking and loss of color, as they are dependent on granules that are temporarily adhered to the shingle.

**High Wind Installation Methods that have been tested to withstand wind speeds of up to 180mph are available. Please contact your local Eagle Account Representative or the Tile Roofing Institute (www.tileroofing.org) for more information.*

Estate
SHE 8704 Lehigh Blend

Manufacturing Facilities Servicing

Every customer is different. Every project is different. We understand.

Whether you are an Architect, Builder, Designer, Distributor, Roofer or Homeowner, with four manufacturing plants servicing the United States and Canada, our customers can rest assured that we have the right products to meet their needs. Quality products and customer relationships are the core of our business. That's what inspires us to be your company of choice. That's what makes us different.

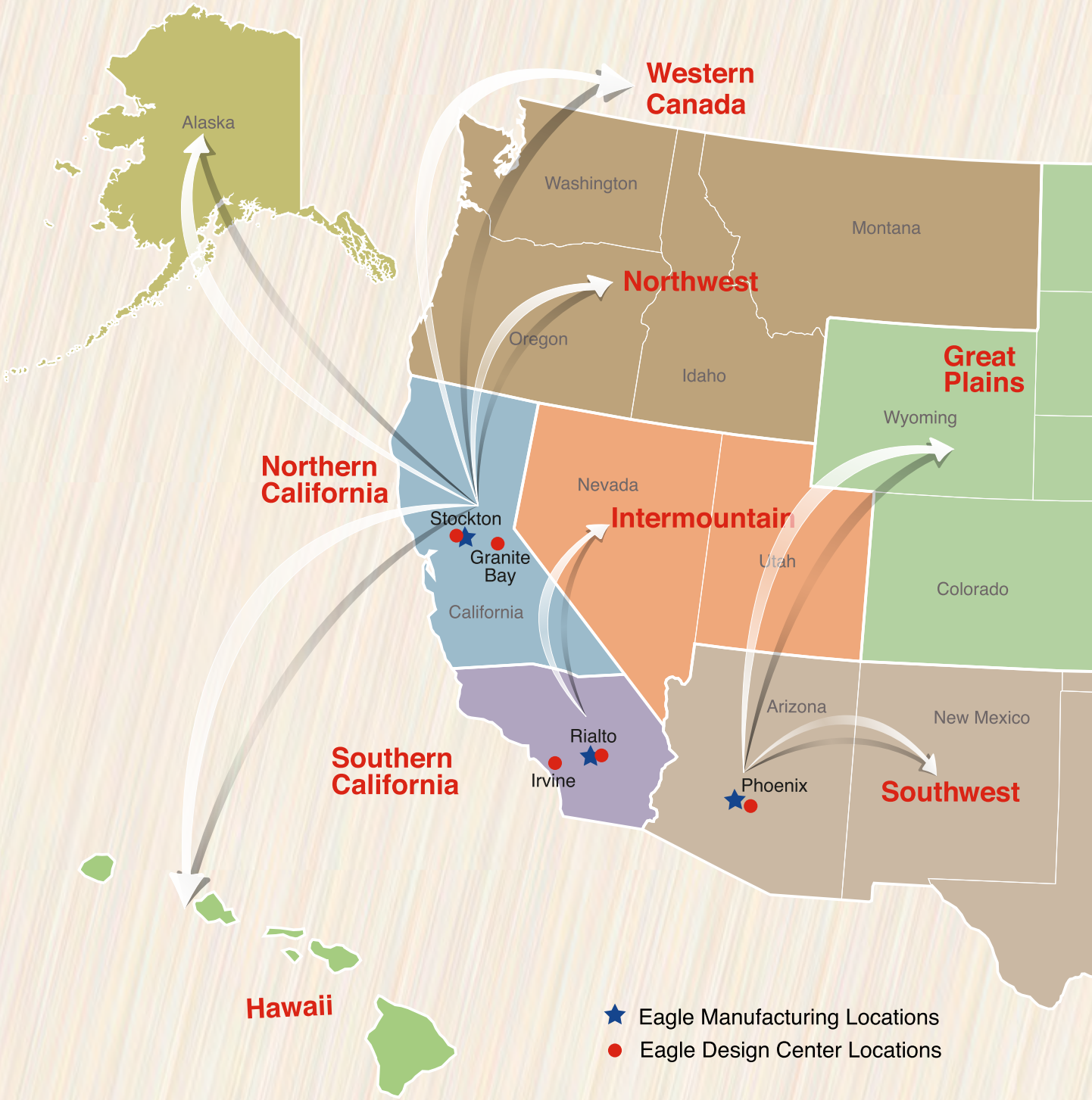

the United States and Canada

Committed to your Trust and Satisfaction

Approvals

IAPMO ER #1900

Specifying Eagle

Every effort has been made to provide you with the tools you need to specify Eagle on your next residential or commercial project. You can find these tools on our website at www.eagleroofing.com under the main tab Resources – Design Professionals.

Installation

Eagle recommends that you find a licensed and insured Roofer for all of your roofing needs. Detailed installation recommendations can be found in the *Concrete and Clay Roof Tile Installation Manual (July 2015)* published by the Tile Roofing Institute & Western States Roofing Contractor Association. For further information, please visit: www.tileroofing.org

Blended Tile

Blended tile provides added value and beauty to any architectural structure. However, it requires careful placement by your Roofing Contractor, who is responsible for ensuring that the placement of the tile is completed in an aesthetically pleasing manner. Eagle Roofing Products recommends that you discuss this design effect with your Roofer, prior to installation, to ensure that no hot spots (patches of color that undo the blended effect) are created.

Warranty

As the largest USA Owned, USA Made concrete roof tile manufacturer, Eagle Roofing Products proudly stands behind its products with a Lifetime Transferable Limited Product Warranty. We recommend that all customers read our warranty for details and conditions, which can be found at www.eagleroofing.com.

Disclaimer

Eagle Roofing Products concrete roof tile is made from natural materials and color variations are to be expected. Every effort has been made to ensure the colors in this brochure are as close to the actual roof tile; however, photographic and printing techniques can alter the printed colors shown, varying it from actual tile colors. In addition, colors are subject to change, as slight variations in color or flashing may occur during manufacturing. To ensure your satisfaction with the tile you chose from this brochure, we strongly recommend that you obtain a free tile sample from your Roofing Contractor, an Eagle Design Center or an Eagle Account Representative before placing your order.

Visit an Eagle Design Center

A beautiful roof is one of the most important architectural elements of a home or building. So why not visit an Eagle Design Center, where you can see our huge selection of colors, textures, styles and products? Whether you need tile samples, design consultation, technical specifications, installation guides or more, our knowledgeable professionals are here to support you every step of the way.

Southwest Eagle Design Center

Free Email and Phone Consultations Available

Phoenix
4608 W. Elwood
Phoenix, AZ 85043
Phone: 602-346-1749

Manufacturing & Stocking Yard

Servicing the States of Arizona, New Mexico, Oklahoma and Texas

Phoenix
4602 W. Elwood
Phoenix, AZ 85043
Customer Service Phone: 800-346-5260

EAGLE® ROOFING PRODUCTS

Corporate Offices
3546 N. Riverside Ave.
Rialto, CA 92377
Phone: 909-822-6000
www.eagleroofing.com

Connect with us!

Eagle is proud to be affiliated with these organizations:

TILE ROOFING INSTITUTE ARCAT

© 2017 Eagle Roofing Products. 7/2017